ScaffoldMart.com

5’ UTILITY SCAFFOLDING

MODEL: UTLSCAFF5

USERS MANUAL & SAFETY GUIDE

Thoroughly read this manual before assembling or using scaffolding unit. Failure to do so can result in **injury or death.** Seriously... **read it.**

One Year Warranty

This product is guaranteed for one year against flaws in materials and craftsmanship

OSHA CONFORMANCE TO 29 CFR PT. 1926

ANSI MEETS CODE A10.8

CSA CONFORMITY TO CSA STANDARD

900 LB MAX LOAD

SAFETY GUIDE AND BOX CONTENTS

Read Before Use
Thoroughly read this manual before assembling or using scaffolding unit.

Electrical Warning
Never use scaffolding unit in proximity to live electrical circuits or power lines.

Do Not Over Encumber
This unit was designed for a maximum capacity load of 900 lbs (227 kg).
Per decking unit: 450 lbs (113 kg) Tool Shelf: 35 lbs (16 kg).

Prior to Use

- Only use scaffold unit as intended while complying with local, state, and national guidelines and legislation.
- A competent person should manually inspect scaffolding prior to each use, ensuring it is in good working condition and that all parts are present and properly assembled.
- Only use on level, hard, even surfaces. Avoid using scaffold on surfaces that are soft, muddy, debris filled, holey or otherwise obstructed.
- Refrain from using scaffolding if you are unwell, taking medication, consuming alcohol, mind-altering drugs or experiencing any other condition that may impair your ability to work.
- Three platforms should be installed on frame structure prior to use, all set level. Scaffold collapse is possible if platforms are not set level and could result in injury or death.
- Casters must always be secured with span pins and caster brakes must be locked before climbing or standing on scaffolding.
- Do not use any scaffolding component that is damaged or if parts are missing.

During Use

- Keep body centered inside structure of scaffold to avoid tipping.
- Maintain a constant firm grip while climbing scaffold. Always maintain three points of contact.
- Keep scaffold free of clutter and unnecessary equipment to avoid tripping while in use.
- If any part of scaffolding unit becomes damaged during use, it should be removed immediately from the work area and replaced.
- Acids are corrosive and exposure diminishes the integrity of scaffold unit. Do not expose to corrosive materials.
- Remove or fasten all tools, material, or equipment before moving scaffolding. Never move scaffold while a person is on unit. Be careful when moving unit to avoid tipping.
- This scaffold should be stored inside, out of the elements and away from excessive heat or corrosive materials. Rust and other forms of corrosion or deterioration compromise the structural integrity of the scaffold and should be avoided. Do not use scaffold if structure is compromised in any way.
- Unit intended to hold a maximum of one person.
- A safe work platform to stand upon should be at least 18 inches wide.
- Remove all tools and materials before moving scaffolding.
- Before using tool shelf, make sure hinges are fully engaged.

Do Nots

- Never use powered devices to propel this scaffold unit.
- Never stack on loose materials, boxes, or any other non-approved foundation.
- Never move scaffold with personnel on unit.
- Never load unit without caster brakes locked.
- Never use scaffold in windy conditions or during inclement weather.
- Never use on uneven or soft surfaces.
- Never stand or sit on tool shelf. Max shelf
- capacity 35 lb.
- Never use if any part of the scaffold unit is missing.
- Never modify the scaffolding in any way, doing so voids its warranty.
- Never climb the outside of the unit

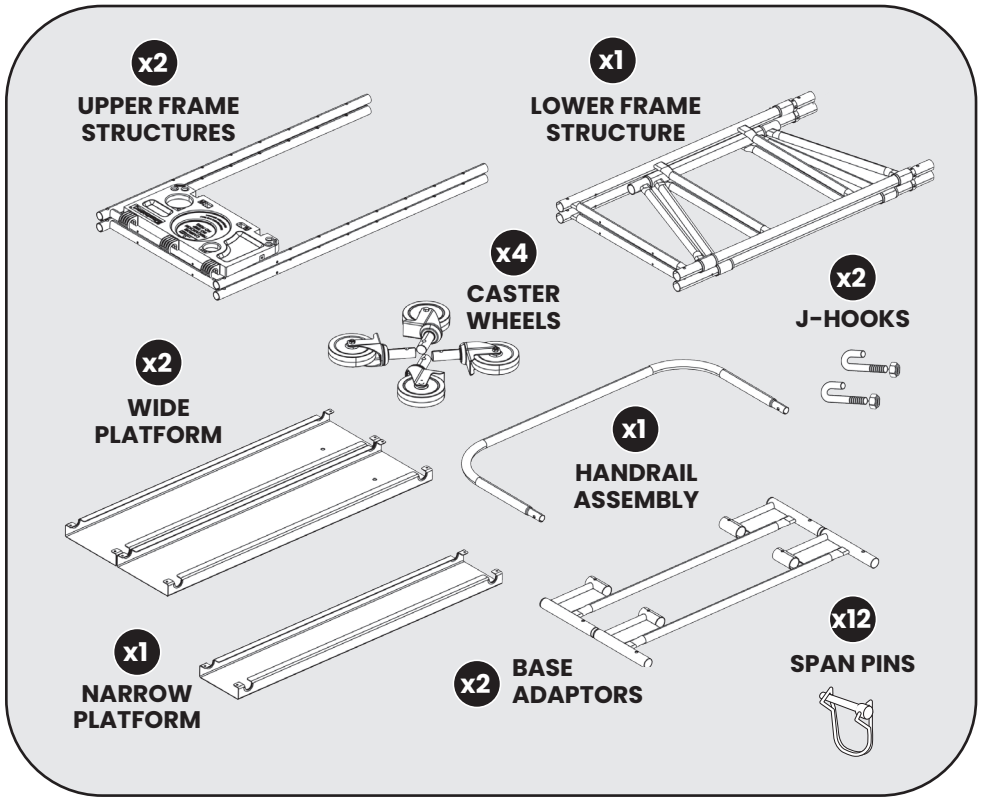

5’ UTILITY SCAFFOLDING ASSEMBLY

ScaffoldMart.com

1 IMPORTANT: Unpack the box contents on a level, hard, unobstructed surface.

Note: To easily set the height of the Tool Shelf and Hand Rail, the upper frame assembly has holes running down the length of each side.

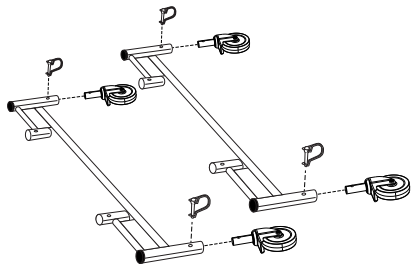

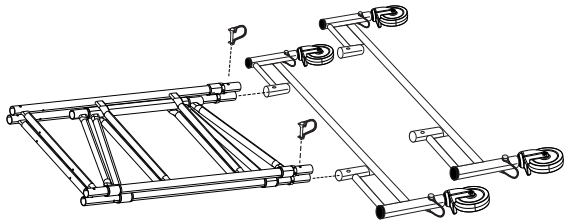

2 Insert casters into each Base Adaptor, making certain to secure with Span Pins. **Lock Casters Wheels before proceeding.**

3 Attach each base adaptor to the bottom of Lower Frame Structure, securing all four corners with Span Pins.

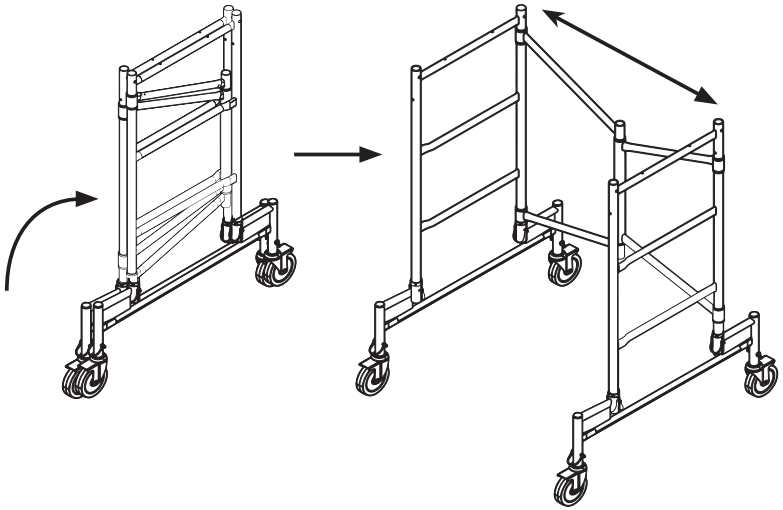

4 Stand the scaffold unit up and spread the ends away from one another, keeping them in parallel. **Note: the unit will tip if the ends are not in parallel.**

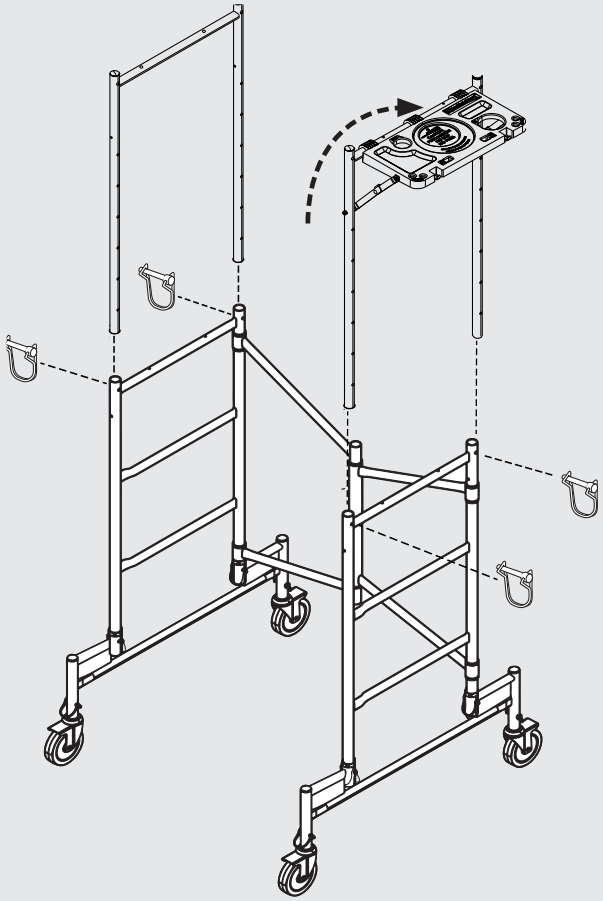

5 Insert the Upper Frame Structures into Lower Frame Structure. Set both Upper Frame structures at the same height and secure all four corners with Span Pins. **Tool shelf should be be turned outward.**

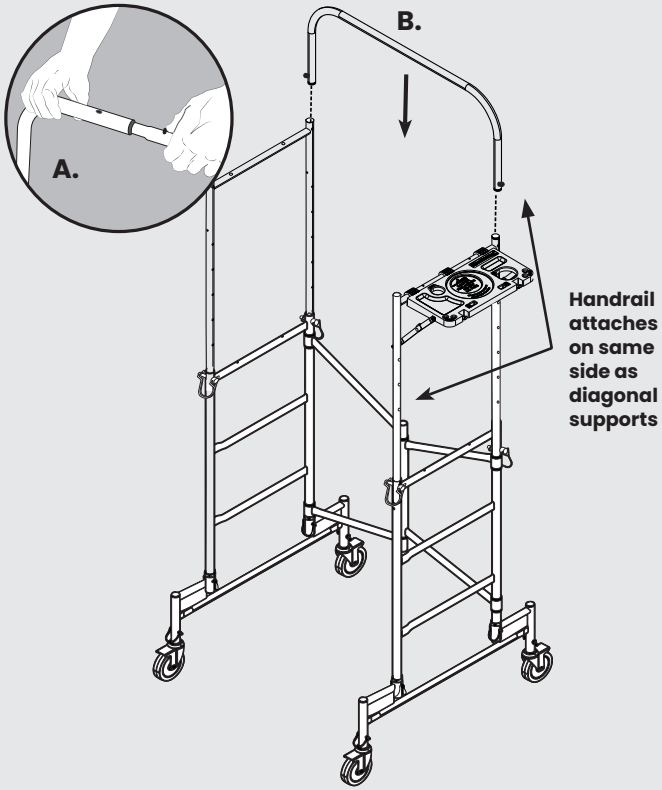

6 **A.** Install the Hand Rail by first fastening the two ends to the center portion. **Make certain spring rivets are secure.**
B. Install into the Upper Frame structures, making sure the spring rivits are secure.

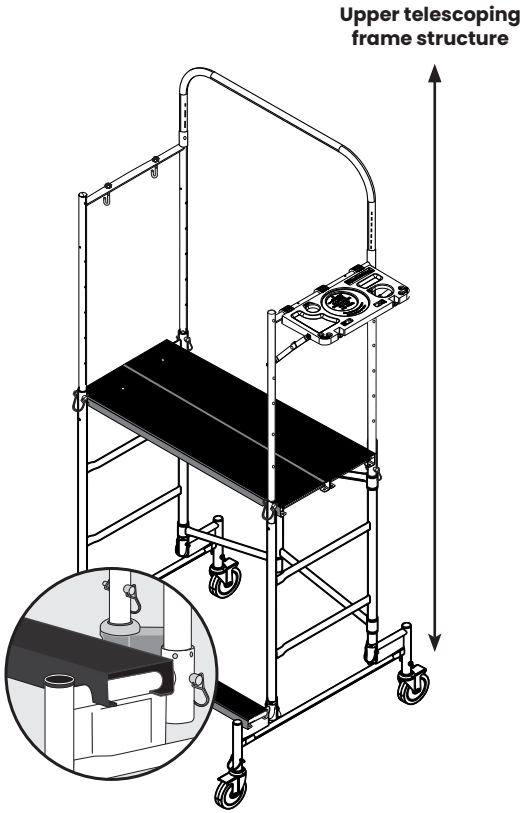

7 With unit extended, place the Platforms at desired heights. **Make certain Platforms are properly seated and level, with their semi-circular cut-outs snug against the horizontal supports.**

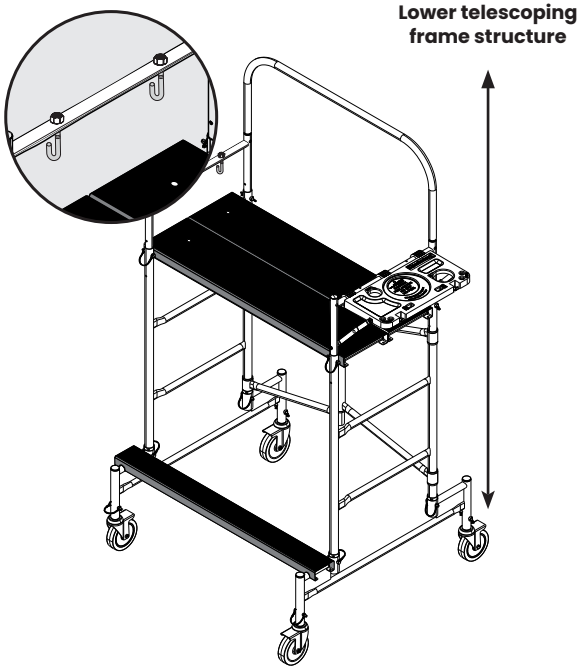

8 Install Platform J-hooks. The top horizontal beam is drilled with two holes, insert hooks through these holes and secure with included nuts.

ScaffoldMart.com

Sales Office: 1705 South Evans St. | Greenville, NC 27834 | **Warehouse Address:** 1002 North Pitt St. | Greenville, NC 27834
Phone: (866) 900-0983 | **Fax:** (252) 756-3849